SUNPOWER™

E19 / 318 SOLAR PANEL

MAXIMUM EFFICIENCY AND PERFORMANCE

BENEFITS

Highest Efficiency
SunPower™ Solar Panels are the most efficient photovoltaic panels on the market today.

More Power
Our panels produce more power in the same amount of space—up to 50% more than conventional designs and 100% more than thin film solar panels.

Reduced Installation Cost
More power per panel means fewer panels per install. This saves both time and money.

Reliable and Robust Design
Proven materials, tempered front glass, and a sturdy anodised frame allow panel to operate reliably in multiple mounting configurations.

SPR-318E-WHT-D

E19 SERIES

The planet´s most powerful solar panel.

The SunPower™ 318 Solar Panel provides today's highest efficiency and performance. Utilising 96 back-contact solar cells, the SunPower 318 delivers a total panel conversion efficiency of 19.5%. The 318 panel's reduced voltage-temperature coefficient, anti-reflective glass and exceptional low-light performance attributes provide outstanding energy delivery per peak power watt.

SunPower's High Efficiency Advantage

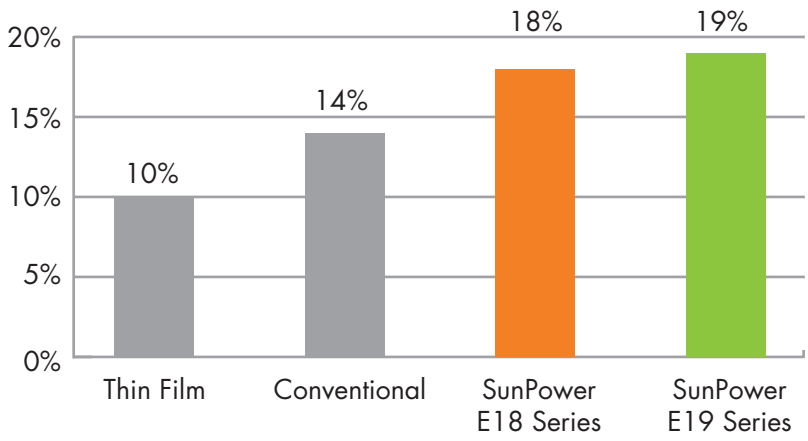

SUNPOWER™

E19 / 318 SOLAR PANEL

MAXIMUM EFFICIENCY AND PERFORMANCE

Electrical Data

Measured at Standard Test Conditions (STC): Irradiance 1000W/m², AM 1.5, and cell temperature 25° C

Nominal Power (+5/-3%)	P_{nom}	318 W
Efficiency	η	19.5 %
Rated Voltage	V_{mpp}	54.7 V
Rated Current	I_{mpp}	5.82 A
Open Circuit Voltage	V_{oc}	64.7 V
Short Circuit Current	I_{sc}	6.20 A
Maximum System Voltage	IEC	1000 V
Temperature Coefficients	Power (P)	-0.38% / K
	Voltage (V_{oc})	-176.6mV / K
	Current (I_{sc})	3.5mA / K
NOCT		45° C +/-2° C
Series Fuse Rating		15 A
Limiting Reverse Current (3-strings)	I_R	15.5 A

Electrical Data

Measured at Nominal Operating Cell Temperature (NOCT): Irradiance 800W/m², 20° C, wind 1 m/s

Nominal Power	P_{nom}	236 W
Rated Voltage	V_{mpp}	50.4 V
Rated Current	I_{mpp}	4.69 A
Open Circuit Voltage	V_{oc}	60.6 V
Short Circuit Current	I_{sc}	5.02 A

I-V Curve

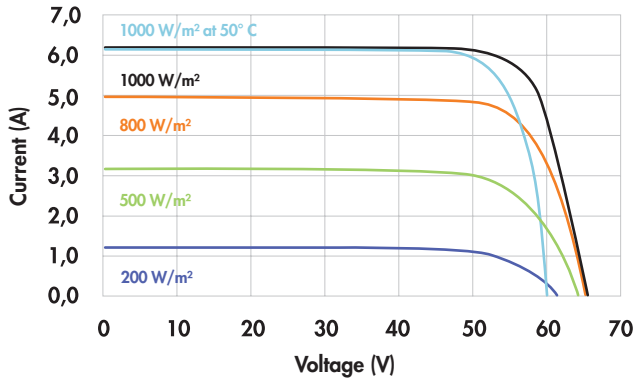

Current/voltage characteristics with dependence on irradiance and module temperature.

Tested Operating Conditions

Temperature	-40° C to +85° C
Max load	550 kg / m² (5400 Pa), front (e.g. snow) w / specified mounting configurations
	245 kg / m² (2400 Pa) front and back - e.g. wind
Impact Resistance	Hail – 25 mm at 23 m/s

Warranties and Certifications

Warranties	25 year limited power warranty
	10 year limited product warranty
Certifications	IEC 61215 Ed. 2, IEC 61730 (SCII)

Mechanical Data

Solar Cells	96 SunPower all-back contact monocrystalline
Front Glass	High transmission tempered glass with anti-reflective (AR) coating
Junction Box	IP-65 rated with 3 bypass diodes
	32 x 155 x 128 (mm)
Output Cables	1000mm length cables / MultiContact (MC4) connectors
Frame	Anodised aluminium alloy type 6063 (silver); stacking pins
Weight	18.6 kg

Dimensions

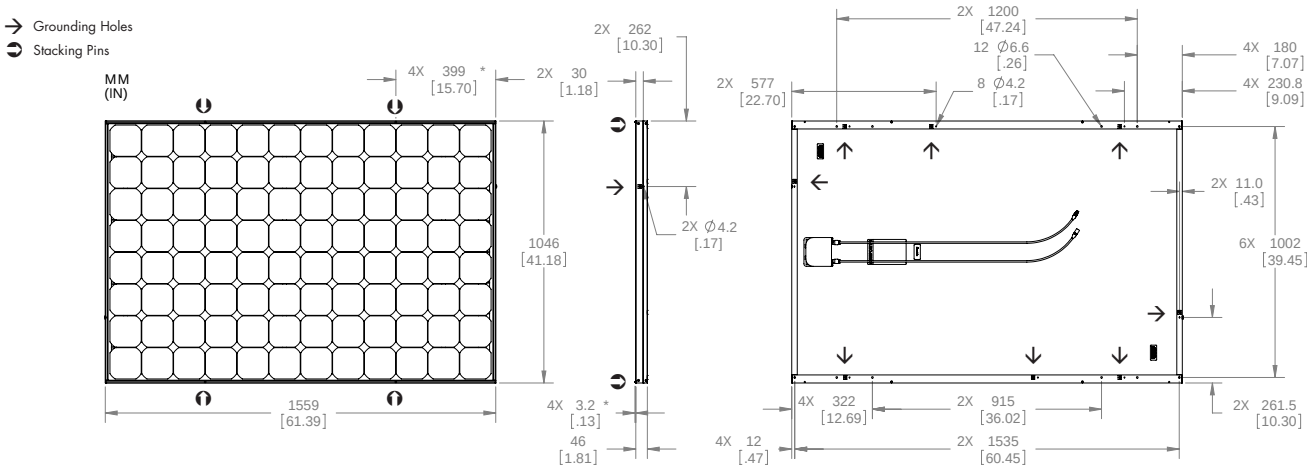

CAUTION: READ SAFETY AND INSTALLATION INSTRUCTIONS BEFORE USING THE PRODUCT.

Visit sunpowercorp.com for details

sunpowercorp.com
Australia: sunpowercorp.com.au

SUNPOWER and the SUNPOWER logo are trademarks or registered trademarks of SunPower Corporation.
© February 2010 SunPower Corporation. All rights reserved. Specifications included in this datasheet are subject to change without notice.

Document #001-61586 Rev** / A4_EN